iiyama
Visual&Technology

ENGLISH
DEUTSCH
FRANCAIS
POLSKI
NEDERLANDS

USER MANUAL

ProLite

LCD Monitor

ProLite P1704S

Thank you very much for choosing the iiyama LCD monitor.
We recommend that you take a few minutes to read carefully through this brief but comprehensive manual before installing and switching on the monitor. Please keep this manual in a safe place for your future reference.

ENERGY STAR

ENGLISH

TCO Development

Congratulations!

The display you have just purchased carries the TCO'03 Displays label. This means that your display is designed, manufactured and tested according to some of the strictest quality and environmental requirements in the world. This makes for a high performance product, designed with the user in focus that also minimizes the impact on our natural environment.

Some of the features of the TCO'03 Display requirements:

Ergonomics

- Good visual ergonomics and image quality in order to improve the working environment for the user and to reduce sight and strain problems. Important parameters are luminance, contrast, resolution, reflectance, colour rendition and image stability.

Energy

- Energy-saving mode after a certain time – beneficial both for the user and the environment
- Electrical safety

Emissions

- Electromagnetic fields
- Noise emissions

Ecology

- The product must be prepared for recycling and the manufacturer must have a certified environmental management system such as EMAS or ISO 14 001
- Restrictions on
  - o chlorinated and brominated flame retardants and polymers
  - o heavy metals such as cadmium, mercury and lead.

The requirements included in this label have been developed by TCO Development in cooperation with scientists, experts, users as well as manufacturers all over the world. Since the end of the 1980s TCO has been involved in influencing the development of IT equipment in a more user-friendly direction. Our labelling system started with displays in 1992 and is now requested by users and IT-manufacturers all over the world.

For more information, please visit
www.tcodevelopment.com

CE MARKING DECLARATION OF CONFORMITY

This LCD monitor complies with the requirements of the EC Directive 89/336/EEC "EMC Directive" and 73/23/EEC "Low Voltage Directive" as amended by Directive 93/68/EEC.
The electro-magnetic susceptibility has been chosen at a level that gives correct operation in residential areas, business and light industrial premises and small-scale enterprises, inside as well as outside of the buildings. All places of operation are characterised by their connection to the public low voltage power supply system.

- We reserve the right to change specifications without notice.
- All trademarks used in this user manual are the property of their respective owners.
- As an ENERGY STAR® Partner, iiyama has determined that this product meets the ENERGY STAR® guidelines for energy efficiency.

ENGLISH

SAFETY PRECAUTIONS

WARNING

STOP OPERATING THE MONITOR WHEN YOU SENSE TROUBLE

If you notice any abnormal phenomena such as smoke, strange sounds or fumes, unplug the monitor and contact your dealer or iiyama service center immediately. Further use may be dangerous and can cause fire or electric shock.

NEVER REMOVE THE CABINET

High voltage circuits are inside the monitor. Removing the cabinet may expose you to the danger of fire or electric shock.

DO NOT PUT ANY OBJECT INTO THE MONITOR

Do not put any solid objects or liquids such as water into the monitor. In case of an accident, unplug your monitor immediately and contact your dealer or iiyama service center. Using the monitor with any object inside may cause fire, electric shock or damage.

INSTALL THE MONITOR ON A FLAT, STABLE SURFACE

The monitor may cause an injury if it falls or is dropped.

DO NOT USE THE MONITOR NEAR WATER

Do not use where water may be splashed or spilt onto the monitor as it may cause fire or electric shock.

OPERATE UNDER THE SPECIFIED POWER SUPPLY

Be sure to operate the monitor only with the specified power supply. Use of an incorrect voltage will cause malfunction and may cause fire or electric shock.

PROTECT THE CABLES

Do not pull or bend the power cable and signal cable. Do not place the monitor or any other heavy objects on the cables. If damaged, the cables may cause fire or electric shock.

ADVERSE WEATHER CONDITIONS

It is advisable not to operate the monitor during a heavy thunder storm as the continual breaks in power may cause malfunction. It is also advised not to touch the plug in these circumstances as it may cause electric shock.

CAUTION

ENGLISH

INSTALLATION LOCATION

Do not install the monitor where sudden temperature changes may occur, or in humid, dusty or smoky areas as it may cause fire, electric shock or damage. You should also avoid areas where the sun shines directly on the monitor.

DO NOT PLACE THE MONITOR IN A HAZARDOUS POSITION

The monitor may topple and cause injury if not suitably located. Please also ensure that you do not place any heavy objects on the monitor, and that all cables are routed such that children may not pull the cables and possibly cause injury.

MAINTAIN GOOD VENTILATION

Ventilation slots are provided to keep the monitor from overheating. Covering the slots may cause fire. To allow adequate air circulation, place the monitor at least 10 cm (or 4 inches) from any walls. Do not remove the tilt stand when operating the monitor. Ventilation slots on the back of the cabinet will be blocked and the monitor may overheat if the stand is removed. This may cause fire or damage. Operating the monitor on its back, side, upside down or on a carpet or any other soft material may also cause damage.

DISCONNECT THE CABLES WHEN YOU MOVE THE MONITOR

When you move the monitor, turn off the power switch, unplug the monitor and be sure the signal cable is disconnected. If you do not disconnect them, it may cause fire or electric shock.

UNPLUG THE MONITOR

If the monitor is not in use for a long period of time it is recommended that it is left unplugged to avoid accidents.

HOLD THE PLUG WHEN DISCONNECTING

To disconnect the power cable or signal cable, always pull it by the plug. Never pull on the cable itself as this may cause fire or electric shock.

DO NOT TOUCH THE PLUG WITH WET HANDS

Pulling or inserting the plug with wet hands may cause electric shock.

WHEN YOU INSTALL THE MONITOR ON YOUR COMPUTER

Be sure the computer is strong enough to hold the weight of the monitor, otherwise, you may damage your computer.

DO NOT PUT FLOPPY DISKS NEAR THE SPEAKERS

Magnetically recorded data, such as on a floppy disk, may become corrupted by the magnetic field produced by the speakers if the disks are placed on or near the speakers.

OTHERS

ERGONOMIC RECOMMENDATIONS

To eliminate eye fatigue, do not operate the monitor against a bright background or in a dark room. For optimal viewing comfort, the monitor should be just below eye level and 40-60 cm (16-24 inches) away from your eyes. When using the monitor over a prolonged time, a ten minute break every hour is recommended as looking at the screen continuously can cause eye strain.

ENGLISH

SPECIAL NOTES ON LCD MONITORS

The following symptoms are normal with LCD monitors and do not indicate a problem.

NOTE

- When you first turn on the LCD monitor, the picture may not fit in the display area because of the type of computer that is used. In this case, adjust the picture position to the correct position.
- Due to the nature of the backlight, the screen may flicker during initial use. Turn off the Power Switch and then turn it on again to make sure the flicker disappears.
- You may find slightly uneven brightness on the screen depending on the desktop pattern you use.
- Due to the nature of the LCD screen, an afterimage of the previous screen may remain after switching the image, when the same image is displayed for hours. In this case, the screen is recovered slowly by changing the image or turning off the Power Switch for hours.
- Contact your dealer or iiyama service center for the backlight replacement when the screen is dark, flickering or not lighting up. Never attempt to replace it by yourself.

CUSTOMER SERVICE

NOTE

- The fluorescent light used in the LCD monitor may have to be periodically replaced. For the warranty coverage on this component, please check with local iiyama service center.
- If you have to return your unit for service and the original packaging has been discarded, please contact your dealer or iiyama service center for advice or replacement packaging.

CLEANING

WARNING

- If you drop any materials or liquids such as water into the monitor when cleaning, unplug the power cable immediately and contact your dealer or iiyama service center.

CAUTION

- For safety reasons, turn off the power switch and unplug the monitor before you clean it.

NOTE

- To protect the LCD panel, do not scratch or rub the screen with a hard object.
- Never use any of the following strong solvents. These will damage the cabinet and the LCD screen.

Thinner	Spray-type cleaner
Benzine	Wax
Abrasive cleaner	Acid or Alkaline solvent

- Touching the cabinet with any product made from rubber or plastic for a long time may cause degeneration or loss of paint on the cabinet.

CABINET Stains can be removed with a cloth lightly moistened with a mild detergent solvent. Then wipe the cabinet with a soft dry cloth.

LCD SCREEN Periodic cleaning with a soft dry cloth is recommended. Don't use tissue paper etc. because these will damage the LCD screen.

PLP1704S-e-COVER 508.P65 6 2007/05/09, 10:12

English

TABLE OF CONTENTS

TABLE OF CONTENTS 1
CHEKING THE CONTENTS OF THE PACKAGE 1
CONNECTING 2
WALL MOUNTING 3
STARTUP 4
BASIC SETUP 4
IMAGE SETTINGS USING THE OSD MENU 5
OSD MENU FUNCTIONS 6
TROUBLESHOOTING 8
TECHNICAL SPECIFICATIONS 9
RECYCLING INFORMATION 10

CHEKING THE CONTENTS OF THE PACKAGE

The following accessories are included in your package. Check to see if they are enclosed with the monitor. If anything is missing or damaged, please contact your local iiyama dealer or regional iiyama office.

- Power Cable*
- D-sub Signal Cable
- DVI-D Signal Cable
- Audio Cable
- User Manual
- Stand

CAUTION *** The rating of the Power Cable enclosed in 120V area is 10A/125V.If you are using a power supply higher than this rating, then a power cable with a rating of 10A/250V must be used. However, all guarantees and warranties are void for any problems or damage caused by a power cable not supplied by iiyama.**

CONNECTING

・**To connect the monitor to your PC**

1. Make sure that the PC and the monitor is unplugged.
2. Connect the 15-pin signal cable to the monitor and The PC (see fig. 2a)
3. If you have a graphic card with a digital DVI-D connector (24-pin socket), then connect one end of the DVI-D cable to the DVI-D connector of your monitor (see fig. 2b), the other end to the computer.

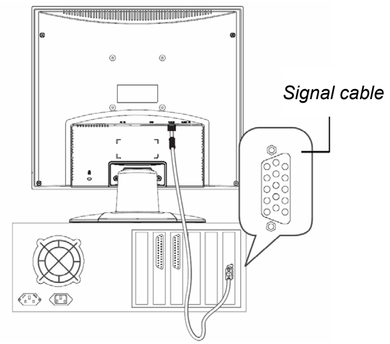

Figure 2a*.Connecting the monitor to the PC*

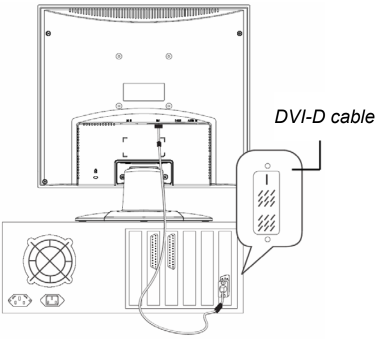

Figure 2b. *Connection via the DVI-D interface*

・**Connecting the audio cable**

If your computer is equipped with an audio output port, connect one end of the sound cable to the audio Input connector of the monitor (① in fig. 3) and the other end to the Line-Out connector of the computer.

・To connect the monitor to the power source

Connect the separate power cable (②in fig. 3) to the Monitor and a grounded outlet.

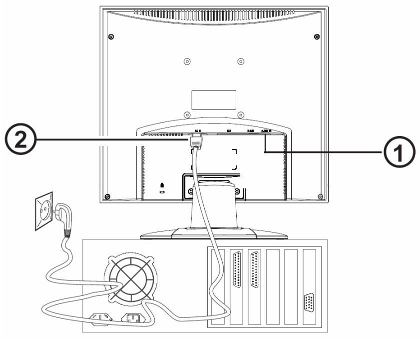

Figure *3.Connecting the monitor to the power source*

WALL MOUNTING

The iiyama monitor is shipped with the standard desktop configuration. However, you can optionally mount the device on a wall or on a monitor swivel arm (optional accessory). Please follow the corresponding instructions (4-hole assembly with a spacing of 4 × 4 inches (100 × 100 mm)according to the international VESA FDMI standard).

STARTUP

1. First start your PC and then turn on your monitor using the power switch (① in fig. 4).

   The status indicator (① in fig. 4) should light up green.

2. Adjust the image to meet your requirements (see the following sections "Basic Setup" and "Image settings using the OSD menu").

3. If there is no image displayed on the monitor, consult the section "Troubleshooting".

BASIC SETUP

・**Automatic Image Adjustment**
You can adjust the image settings (such as brightness, contrast, image position, phase, etc.) manually or by using the LCD monitor's automatic image adjustment feature. This will adjust the image parameters to their optimal settings for the current graphics mode. Press AUTO (① in fig. 4) to launch the automatic adjustment. The process will take a short while until completed.

・**Setting the volume directly**
You can adjust the speaker volume of the integrated audio system directly by pressing the ► buttons (④ in fig. 4) while the OSD menu is inactive. Next press the ► button to increase the volume or the ◄ button to decrease it.

・**Shortcut for adjusting brightness and contrast**
You can adjust brightness and contrast directly by pressing the ◄ buttons (④in fig. 4) while the OSD menu is inactive. Next, press the ◄ or ► buttons (④and⑤ in fig. 4) to adjust the brightness or the ◄ or ► buttons (④and⑤ in fig. 4) while the OSD contrast.

IMAGE SETTINGS USING THE OSD MENU

The OSD menu is a window on your screen that allows you to view and change display settings. To change an OSD setting:

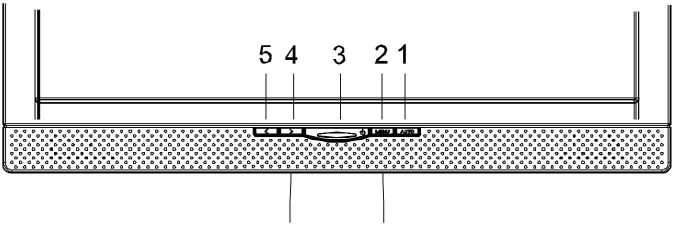

***Figure** 4.Monitor features*

Press the **MENU** button (② in fig. 4) to display the OSD menu on the screen.

1. There are a total of 5 OSD submenus divided by categories. Select the desired submenu by pressing the ◄ or ► button (④ and ⑤ in fig. 4; see section "OSD Menu Functions").

2. Press the button **MENU** (② in fig. 4) to activate the selected function or associated submenu.

3. If you selected submenu, now select the sub-function you want using the ◄ or ► buttons(④ and ⑤ in fig. 4).

4. Set the desired value using the ◄ or ► button.

5. Press the **MENU** button (② in fig. 4) to save the setting. Repeat setups 2-5 to make further adjustments as needed.

6. The OSD menu automatically disappears if no changes are made for more than 20 seconds (default setting). The current settings will be saved. You can close it manually by pressing the **AUTO** button (① in fig. 4).

Direct

You can lock the OSD.

Lock: Press the ► Key + Power key same time.

Un Lock: Press the ► Key + Power key same time.

OSD MENU FUNCTIONS

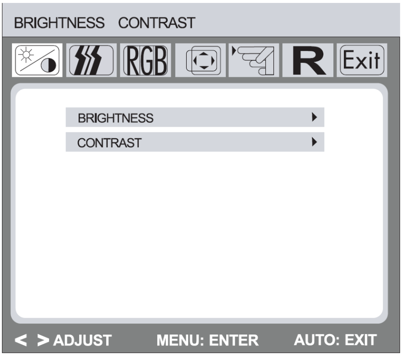

Brightness/Contrast		
Adjustment Item	Problem/Option	Button to Press
BRIGHTNESS	Too dark	Press ▶
	Too bright	Press ◀
CONTRAST	Too dark	Press ▶
	Too bright	Press ◀

IMAGE CONTROL		
Adjustment Item	Problem/Option	Button to Press
AUTO ADJUSTMENT	Adjust H./V. Position, Pixel Clock and Phase automatically.	
H.POSITION	Too left	Press ▶
	Too right	Press ◀
V.POSITION	Too low	Press ▶
	Too high	Press ◀
CLOCK	Too narrow	Press ▶
	Too wide	Press ◀
PHASE	To correct flickering text or lines.	Press ◀ or ▶

English

COLOR		
Problem/Option	Button to Press	
9300k		
6500k		
CUSTOM COLOR	Red	Too week Press ►
	Green	Too strong Press ◄
	Blue	
sRGB		

OSD CONTORL		
Adjustment Item	Problem/Option	Button to Press
H OSD POSITION	OSD is too left	Press ►
	OSD is too right	Press ◄
V OSD POSITION	OSD is too low	Press ►
	OSD is too high	Press ◄
OSD TIMEOUT	you can set the OSD display duration time. Too bright	Press ◄ or ►

OTHER		
Adjustment Item	Problem/Option	Button to Press
LANGUAGE	English, German, French, Spanish, Italian, Polish, Nether land, Russian.	
INPUT	D-Sub or DVI	
SPEAKER VOLUME CONTRAST	Too soft	Press ►
	Too loud	Press ◄
INFORMATION	Displays information regarding the current input signal coming from the graphic card in your computer	ON or OFF

RESET		
Adjustment Item	Problem/Option	Button to Press
YES	Factory-preset data is restored.	
NO	Return to menu.	

TROUBLESHOOTING

Blank Screen

Power indicator is off

- Make sure the power cable and the power adapter are connected properly (see section “Connecting”).
- Make sure that the monitor was turned on using the power switch (see section “Startup”).

Power indicator lights orange

- A screen saver may have activated automatically after a certain period of inactivity. Press any key on your keyboard or move the mouse.

“Check signal cable”message

- Is the signal cable connected to the monitor and the PC’s graphics port (see section “Connecting”)?
- Is the PC turned on (see your PC’s documentation)?

Display Problems

Image is displaced to the left/right or to the top/bottom

- If the image appears normal but off-center, you can adjust it using the OSD functions. For further information, see chapter “Basic Setup”, section “Auto Image Adjustment”.

Image flickers or is shaky

- Perhaps setup file chosen for the monitor is incorrect. For information on monitor setup under Windows® 9x/ME/2000/NT/XP consult the “Configuration” section.

Image is blurred

- Check brightness and contrast settings (see chapter “OSD Menu Functions”, section “Brightness/Contrast”).
- Check the resolution setting (see “Other” functions in the “OSD Menu Functions” section).

Color problems

- If the colors are off (e.g. white is not really displayed as white, etc.), you should adjust the color temperature (see“Color” function in section “OSD Menu Functions”).

TECHNICAL SPECIFICATIONS

English

LCD panel	Daiagonal:17.0″ Pixel pitch:0.864(W)x0.264(H) Brightness:300cd/m^2 (Typical) Contrast ratio:1000:1 (Typical) Viewing angle:Right/Left:80 degrees each. :Up/Down:80 degrees each. Response time:5ms (Black, white, black)
Display colors	Approx. 16.2M (6bit+FRC)
Sync Frequency	31~ 81 kHz horizontal, 56 ~ 75 Hz vertical
Dot Clock	160MHz maximum
Maximum Resolution	1280 x 1024
Input Connector	D-Sub mini 15pin, DVI-D 24pin
Plug & Play	VESA DDC2B™
Input Sync Signal	Separate sync: TTL, Positive or Negative
Input Video Signal	Analog:0.7Vp-p (Standard), 75Ω,Positive Digital: DVI(Digital Visual Interface standard Rev.1.0) compliance.
Input Audio Connector	φ 3.5mm mini jack (Stereo)
Input Audio Signal	0.5Vrms maximum
Speakers	1W x 2 (Stereo speakers)
Maximum Screen Size	337.920mm(W)x270.336(H)
Power Source	100-240VAC, 50/60Hz, 1.0A
Power consumption	40W maximum, Power management mode:2W maximum*
Dimensions / Net Weight	380 x 402.5 x 213.5mm (WxHxD),5.2Kg
Tilt Angle	Forward:5 degrees Backward:20 degrees
Environmental Considerations	Operation: Temperature 5 - 35℃ humidity:20 - 90% (No condensation) Storage: Temperature -20- +60℃ humidity:5 – 90% (No condensation)
Approvals	TCO’03, CE, CB,TUV-GS,TUV-ERGO

*Condition :Audio equipment is not connected.

RECYCLING INFORMATION

All recycling information is placed in the iiyama international’s website.

http://www.iiyama.com/recycle